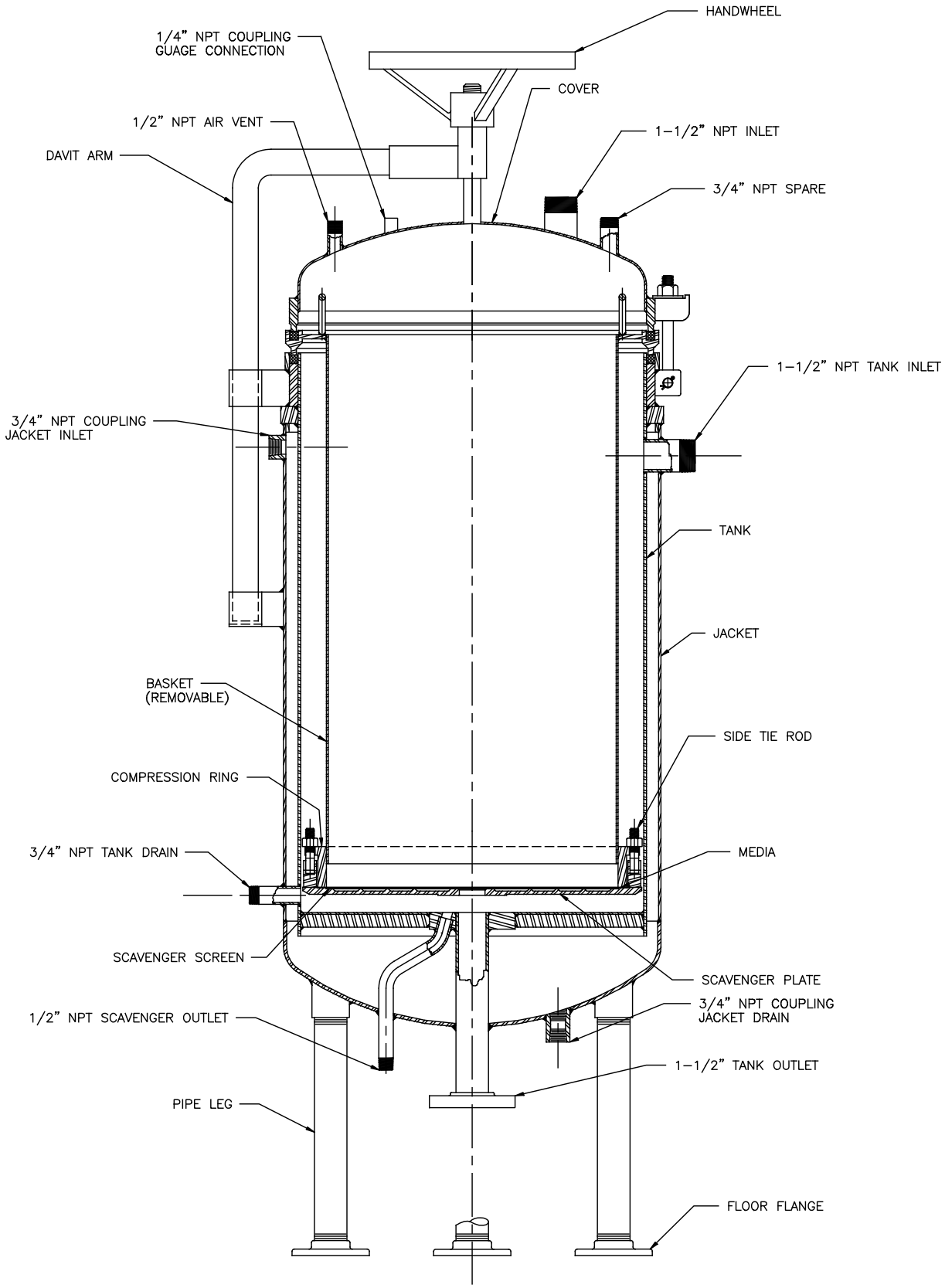

TOLERANCES: ALL DIMENSIONS, UNLESS OTHERWISE SPECIFIED, SHALL BE HELD TO: ±.005 FOR DECIMALS ±1/32" FOR FRACTIONS ±1/2° FOR DEGREES.

REVISIONS	DATE	BY	CKD.

MATERIAL

SPARKLER FILTERS INC.
CONROE, TEXAS

CROSS SECTION OF 18"
BASKET NUTSCHE TANK

DATE 12-01-93 | DRAWN BY PHIL | DWG. NO. F-4883
SCALE 1/4" = 1" | CKD. BY